OPERATIONAL APPLICATION

Terrestrial Mobile TV

Yan Binfeng
Zhang Zhijiang
(China Unicom Co. Ltd., Beijing 100032, China)

Abstract:
Mobile TV services can be offered by the cellular communication network and the terrestrial/satellite digital broadcasting network. There are four technologies for implementing mobile TV. They are respectively based on the cellular mobile network, terrestrial digital broadcasting TV network, satellite, and application layer. Digital Video Broadcasting-Handheld (DVB-H) and Terrestrial-Digital Multimedia Broadcasting (T-DMB) are two typical terrestrial digital TV broadcasting standards. The former is specified by the DVB Project for delivering multimedia services to handheld terminals through the terrestrial digital broadcasting network, and the latter was launched in Korea on the basis of the Eureka-147 Digital Audio Broadcasting (DAB) standard. The development of mobile TV currently faces the problems concerning standards, frequency resources, regulation and terminals. Mobile TV can be independently operated by the mobile operator or the broadcasting and TV operator, or jointly operated by the two. Mobile TV is an important attempt of integrating these two networks. Moreover, the coordination of supervision departments and the establishment of technical standards will directly affect the progress of digital convergence in the future.

Mobile TV is a service that allows mobile subscribers to receive broadcast digital audio/video content through channels by using intelligent mobile terminals with operating system and video functions.

Mobile TV is implemented chiefly in two ways: one is to use the cellular mobile networks, through which China Mobile and China Unicom have rolled out their mobile TV services, and the other is to use terrestrial or satellite digital broadcasting, via which the handset equipped with a digital TV receiving module can directly receive digital TV signals. The latter is currently a preferred choice for offering mobile TV service.

As an emerging multimedia service, mobile TV has aroused widespread concern in the industry. There have been heated researches on this service around the world. Over ten related technologies have been introduced, and they can be classified into the following four types:

(1) Technologies Based on Mobile Networks

These technologies use the spectrum bands occupied by the mobile communications system, and provide users with downlink broadcast channels through improved mobile communications networks. The typical technologies include Multimedia Broadcast Multicast Service (MBMS) and Broadcast and Multicast Service (BCMCS).

(2) Technologies Based on Terrestrial Digital Broadcasting Networks

These technologies use the broadcasting TV spectrum bands and are designed for terrestrial digital broadcasting TV. Some are mobile TV technologies that make enhancements on the terrestrial digital broadcasting TV technologies, such as Digital Video Broadcasting-Handheld (DVB-H) and MediaFLO, while others are still used for terrestrial digital broadcasting TV systems, including Korea's Terrestrial-Digital Multimedia Broadcasting (T-DMB), Japan's Integrated Services Digital Broadcasting-Terrestrial (ISDB-T), Digital Multimedia Broadcasting-Terrestrial (DMB-T) launched by Tsinghua University and Advanced Digital Television Broadcasting-Terrestrial (ADTB-T) developed by Shanghai Jiao Tong University.

(3) Technologies Based on Satellite Broadcasting Networks

These technologies provide downlink transmission via satellite. Typical technologies include Europe's Satellite-Digital Multimedia Broadcasting (S-DMB), as well as Japan's and Korea's S-DMB.

(4) Technologies Based on Application Layer

Represented by the Open Mobile Alliance Broadcast service group (OMA BCAST), these technologies define the implementation of mobile TV service in terms of the application layer.

This article introduces two typical terrestrial digital broadcasting TV technologies: DVB-H and Korea's T-DMB, and discusses the main problems in the development of mobile TV.

1 DVB-H Standard

1.1 DVB-H Network Architecture

DVB-H uses the digital terrestrial network for downlink transmission of mobile TV content. It adopts the cellular mobile network for on-demand services,

D:\EMAG\2007-09-15/VOL4\OA1.FIT——6PPS/P1

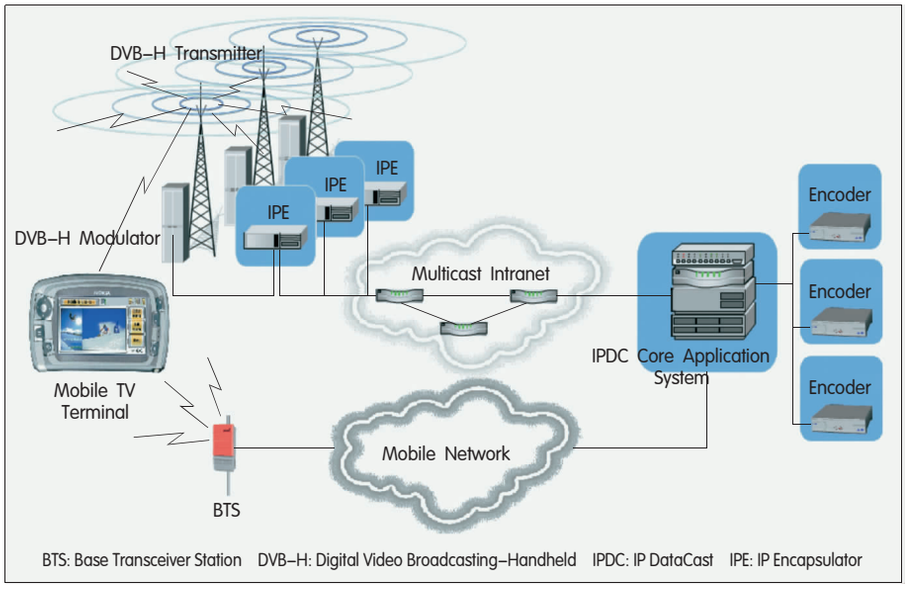

▲Figure 1. DVB-H network architecture.

user authorization and accounting, customer service and interactive backhaul. Its network architecture consists of the digital terrestrial network and cellular mobile network, as shown in Figure 1.

1.2 DVB-H Key Technologies

The Digital Video Broadcasting (DVB) standard family was first put forward by the DVB Project in the early 1990s. Digital Video Broadcasting-Terrestrial (DVB-T) was developed during the mid 1990s and was accepted as a European DVB standard by the European Telecommunications Standard Institute (ETSI) in February 1997. The DVB-T standard has been adopted in 59 countries and regions around the world including Australia, New Zealand, Brazil and Singapore, in addition to European countries. From the overall application perspective, the DVB-T technologies have been quite mature.

DVB-H is based on DVB-T and full backward compatible. DVB-H services can share the DVB-T multiplexer with Moving Picture Experts Group phase 2 (MPEG-2) services. DVB-H was approved by the ETSI in 2004 as a European mobile TV standard. DVB-H networks have been built and tried for commercial use in more than 20 countries worldwide.

DVB-H allows simultaneous transmission of multiple channels of television, radio and video to mobile handheld devices including mobile phones. It uses time slicing to reduce power consumption of receiving devices, and adds Cell Identifiers (Cell IDs) to support fast scanning of signals and frequency handoff. Moreover, it improves the intensity of signals received in mobile environments, thus supporting indoor, outdoor, portable and mobile scenarios.

Compared to DVB-T, DVB-H adds the following technologies:

(1) Introduction of time slicing to reduce power consumption

In order to reduce the receiver's power consumption, DVB-H sends data in burst mode, i.e., one service exclusively occupies all bandwidth of the system to send data for a certain time (such as 200 ms), and then the next service is sent. After all services are sent (such as after 4 s), the first service will be retransferred. The receiver only needs to receive signals at a specified time, and can be closed at another time. As data are transferred at a high rate, the duration of each time segment will be very short. Therefore, the receiver is in a dormant or closed state most of the time, saving a maximum of 90% of the power consumption.

(2) Introduction of 4K mode to achieve wide area coverage while supporting mobility

The 4K mode in DVB-H uses 3 409 carriers. Each subcarrier has three modulation modes: Quadrature Phase Shift Keying (QPSK), 16 Quadrature Amplitude Modulation (QAM) and 64QAM.

(3) Introduction of MultiProtocol Encapsulation-Forward Error Correction (MPE-FEC) to deliver IP-based services and to enhance anti-interference capability

The MPE-FEC technology adds Reed-Solomon (RS) error correction codes in IP packets. The MPE-FEC frames are arranged in a matrix with 255 columns. The number of the matrix rows can vary from 1 to a given value (the maximum value is 1 024). Therefore, the maximum MPE-FEC frame occupies 2 megabits.

DVB-H has the following advantages:

- Low terminal power consumption: The receiver is open to receive IP-based packets for only 10% of the whole transfer time.
- Seamless handover: Only one receiver is used to complete the handoff and ensure the service continuity.
- Enhanced mobile and portable receiving capability: MPE-FEC enhances the reception of weak signals, improves anti-interference competence and supports transfer of high-speed mobile data.
- Large capacity: It can transfer 40 to 50 TV channels within the 8 MHz bandwidth.
- High flexibility: It allows flexible capacity selection and cell size by using mobile signal reception of individual antenna in middle- to large-sized Single Frequency Networks (SFN).
- Compatible with DVB-T: DVB-H and DVB-T are based on the same physical layer; thus, they can use the same modulator and transmitter.

In the DVB-H technical solution, IP Datacast (IPDC) fulfills the authentication of its users through the mobile network. Moreover, concerning the billing and accounting, customer care and customer management of mobile TV services, as well as other services such as Video on Demand (VoD), downloading and web browsing, are also implemented through the mobile network. The IPDC solution provides the standard Simple Network Management Protocol (SNMP) interface to enable interoperability with the operator's existing network management

D:\EMAG\2007-09-15/VOL4\OA1.FIT——6PPS/P2

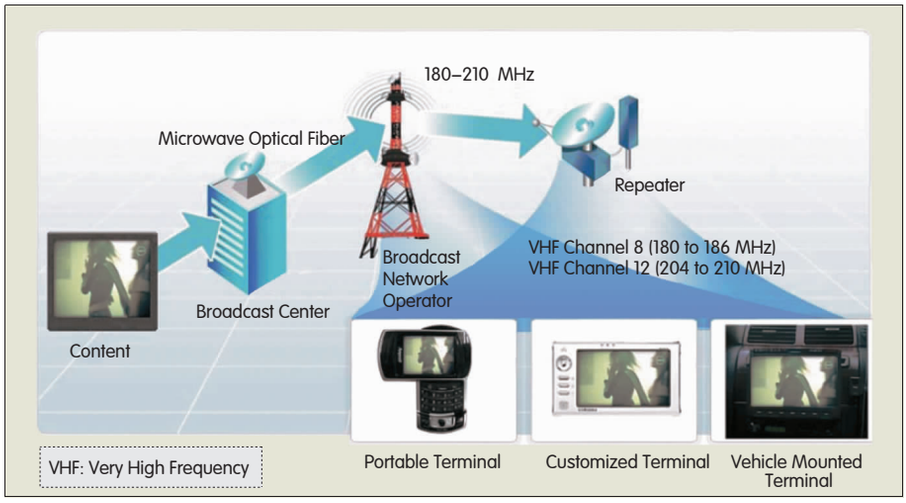

▲ Figure 2. T–DMB network architecture.

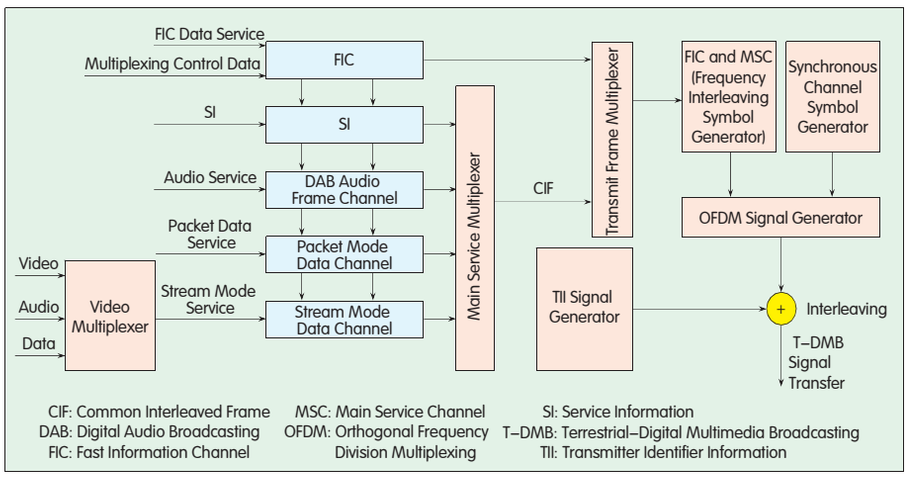

▲ Figure 3. T–DMB transport structure based on the Eureka–147 DAB.

system.

The process of user authentication implemented in the IPDC solution is as follows:

(1) A mobile terminal user sends a request for a program to the IPDC core application system in the form of a short message; and then, the core application system authenticates the user after receiving the request.

(2) After the authentication, the core application system will send the Rights Object (RO) in the Open Mobile Alliance (OMA) Digital Rights Management standard (DRM).

(3) After receiving the RO in the OMA DRM, the mobile terminal can open the related security file and use the key to decrypt and display the encrypted video program.

The IPDC solution implements billing for mobile TV services based on the mobile operator's existing billing system. The related Call Detail Records (CDRs) are generated in the IPDC core application system, and are then transferred to the billing system for billing and accounting.

The IPDC solution provides a management system specially designed for configuration and monitoring of the IP Encapsulator (IPE). The operator can also use the existing network management system to implement centralized monitoring of the alarms sent from the IPDC core application system and IPE. The fault management interface is based on the standard SNMP.

2 Korea's T–DMB Standard

2.1 T–DMB Network Architecture

The T–DMB network architecture is shown in Figure 2.

The T–DMB transport structure based on the Eureka–147 DAB is shown in Figure 3.

The T–DMB transfer frame consists of three channels, namely, the Synchronous Channel (SC), the Fast Information Channel (FIC) and the Main Service Channel (MSC), as shown in Figure 4.

FIC consists of several Fast Information Blocks (FIBs) that are responsible for transferring the control information necessary for interpretation of the MSC configuration. The core of the control information is the Multiplexer Configuration Information (MCI), which contains the multiplexer structure information and necessary multiplexer reconfiguration information. Other information included in the FIC indicates Service Information (SI), Conditional Access (CA) management information and Fast Information Data Channel (FIDC). In order to respond to the MCI in a fast and secure manner, the FIC is neither interleaved in time nor transferred by adopting high–level error protection mechanism.

The MSC contains a series of Common Interleaved Frames (CIFs). A

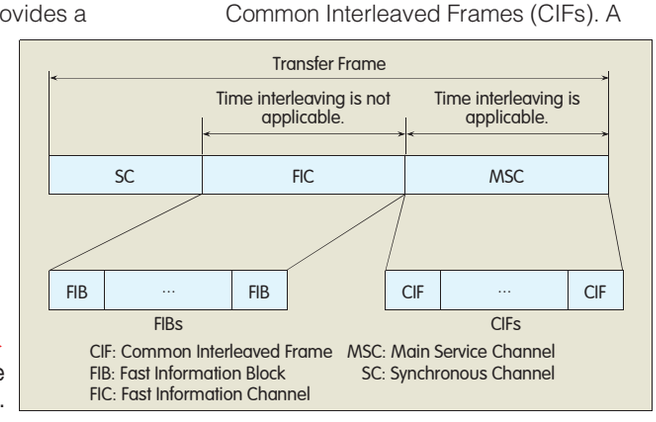

Figure 4. ▶ T–DMB transfer frame structure.

D:\EMAG\2007–09–15/VOL4\OA1.FIT——6PPS/P3

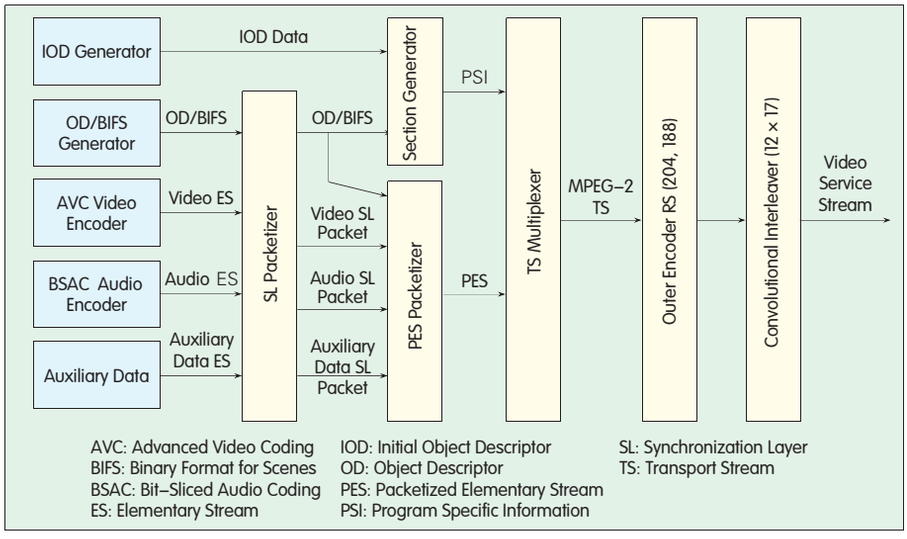

▲Figure 5. Schematic diagram of T–DMB video multiplexer.

CIF is transmitted every 24 ms and contains 55 296 bits. A Capacity Unit (CU) is the smallest addressable unit of a CIF and contains 64 bits. An integral number of CUs can form the basic transfer unit of the MSC, also called the sub–channel. These sub–channels are multiplexed in the MSC.

Two transport modes are defined for service components in the MSC: the stream mode and the packet mode. In the stream mode, service components are transferred at a fixed bit rate in a given sub–channel. The packet mode may be defined for the purpose of conveying several data service components into a single sub–channel. Each sub–channel may carry one or more service components.

T–DMB, based on the Eureka–147 DAB, supports Korean language and enhances the ability of using a stream–mode data channel to transfer video, audio and data services. For more details, please refer to the ETSI EN 300 401 standard.

When using a stream mode data channel to transmit video, audio and data services, T–DMB has an additional video multiplexer. Figure 5 shows a schematic diagram of the video multiplexer.

The relative functional modules in Figure 5 are described as follows:

• The Initial Object Descriptor (IOD) generator creates an IOD conforming to the ISO/IEC 14496–1 standard.

• The Object Descriptor (OD)/ Binary Format for Scenes (BIFS) generator creates an OD/BIFS stream conforming to the ISO/IEC 14496–1 standard.

• The AVC video encoder transforms the input video signals into the regulated bitstreams following H.264/AVC standard.

• The Bit–Sliced Audio Coding (BSAC) audio encoder transforms the input audio signals into the bitstreams following ISO/IEC 14496–3 BSAC standard.

• The Synchronization Layer (SL) packetizer generates an SL packet from the input data streams according to the ISO/IEC 14496–1 standard.

• The section generator creates a section including an IOD/OD/BIFS according to the ISO/IEC 13818–1 standard.

• The Packetized Elementary Stream (PES) packetizer transforms the input SL packet into a PES packet following ISO/IEC 13818–1 standard.

• The Transport Stream (TS) multiplexer can encapsulate the input section and PES packet into MPEG–2 TS stream.

• The multiplexed MPEG–2 TS is error protected by the outer encoder RS (204, 188).

• If a data stream has error protection implemented by the outer encoder RS (204, 188), it is interleaved into a video service stream in the convolutional interleaver.

2.2 T–DMB Key Technologies

T–DMB adopts key technologies such as Orthogonal Frequency Division Multiplexing (OFDM) modulation, frequency/time interleaving, convolution encoding, RS encoding, convolution interleaving and Single Frequency Network (SFN). Each of these technologies is discussed further below.

(1)OFDM Modulation

OFDM is a high–speed transmission technology in wireless conditions. OFDM divides a given channel into several orthogonal sub–channels in the frequency domain, each sub–channel uses one sub–carrier for modulation, and all sub–carriers are transmitted parallelly. In this way, each sub–channel is relatively flat, although radio channels are not flat and are frequency selective. The signal bandwidth is less than the corresponding channel bandwidth, that is, the signal is narrowband transported through each sub–channel. Therefore the Inter–Symbol Interference (ISI) is significantly reduced. All sub–channel

▼Table 1. Main OFDM modulation parameters adopted by T–DMB

Parameters	Transmitting Mode 1	Transmitting Mode 2	Transmitting Mode 3	Transmitting Mode 4
Number of OFDM Symbols in Each Transmitting Frame L	76	76	153	76
Number of Transmitting Sub–carriers K	1 536	384	192	768
Time Length of a Transmitting Frame T_F	196 608T (96 ms)	49 152T (24 ms)	49 152T (24 ms)	983 304T (48 ms)
Time Length of Nullable Symbol T_{NULL}	2 656T (1.297 ms)	664T (324 us)	345T (156 us)	1 276T (623 us)
Time Length of OFDM Symbol T_S	2 552T (1.246 ms)	638T (312 us)	319T (156 us)	1 276T (623 us)
Reciprocal of Sub–carrier Interval T_U	2 048T (1 ms)	512T (250 us)	256T (125 us)	1 024T (500 us)
Interval of Protection Time	504T (246 us)	126T (62 us)	63T (31 us)	252T (123 us)
Sub–carrier Modulation Mode	Differential QPSK			
Channel Bandwidth B	1.536 MHz			

OFDM: Orthogonal Frequency Division Multiplexing QPSK: Quadrature Phase Shift Keying Note: T=0.48828 s

D:\EMAG\2007–09–15/VOL4\OA1.FIT——6PPS/P4

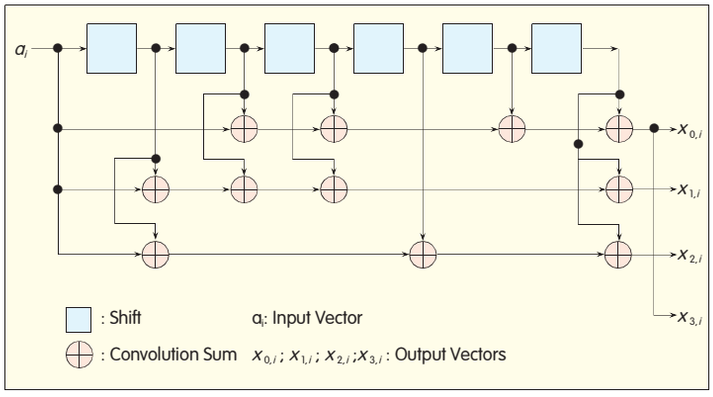

◀Figure 6. Convolution encoder.

carriers in the OFDM system are mutually orthogonal and their spectrums are overlapping, which not only reduces inter–carrier interference but also improves spectrum efficiency. Table 1 shows the main OFDM modulation parameters adopted by T–DMB.

(2)Frequency/Time Interleaving

The purpose of interleaving is to rearrange data in the time or frequency domain to protect against signal fading and error transmission. T–DMB adopts the time and frequency interleaver, and provides different parameters for different sending modes. Furthermore, the time interleaving is applicable for outputs of various convolutional encoders. It is applicable for the sub–channel signals of MSC, but not for those of FIC (see the ETSI EN 300 401 standard).

(3) Convolutional Encoding

Channel coding is based on the punctured convolutional encoding, and it can implement both Equal Error Protection (EEP) and Unequal Error Protection (UEP), depending on the bit error sensitivity (see the ETSI EN 300 401 standard).

Convolutional encoding parameters vary in transported service type, net bit rate and error protection level. The error protection methods include UEP and EEP. The UEP scheme is basically designed for audio, but it can also be applicable for data. However, the alternative EEP approach is applicable for both data and audio.

The octal polynomials generated by the four symbolic vectors are 133, 171, 145, and 133. The structure of the convolution encoder is shown in Figure 6.

(4) RS Encoder

The specifications for RS outer encoder comply with the ETSI EN 300 744 standard, in which a shortened RS (204, 188, t=8) encoder derived from the RS (255, 239, t=8) is defined.

(5) Convolutional Interleaving

The specifications for convolutional interleaving comply with the ETSI EN 300 744 standard. Figure 7 illustrates a conceptual diagram of the outer interleaver based on the Forney approach which follows the Ramsey type III approach, with I = 12.

(6) SFN

In order to achieve reliable coverage for certain service areas, SFN uses multiple radio transmitters, which are synchronous but located in different places, to simultaneously send the same signal over the same frequency channel.

SFN has many attractions. Firstly, it facilitates frequency planning, brings a great saving of valuable frequency resources and improves spectrum efficiency. Secondly, due to the inherent nature of the radio signal, whatever high transmitting power a single digital TV transmitter may provide, there are always areas not covered by any signal in a city with towering skyscrapers. These areas are called blind areas or blind spots. SFN can solve the problem of blind areas coverage and achieve better coverage by means of multi–point co–channel transmitting. Thirdly, the SFN technology can reduce the transmitter cost. By optimizing and adjusting the single–frequency transmitting network (including the quantity and distribution of BTSs, height of the transmitting antenna, and transmitting power), several low–power transmitters can be used to replace one high–power transmitter so as to reduce signal radiation and electromagnetic pollution, enhance coverage evenness, and change the

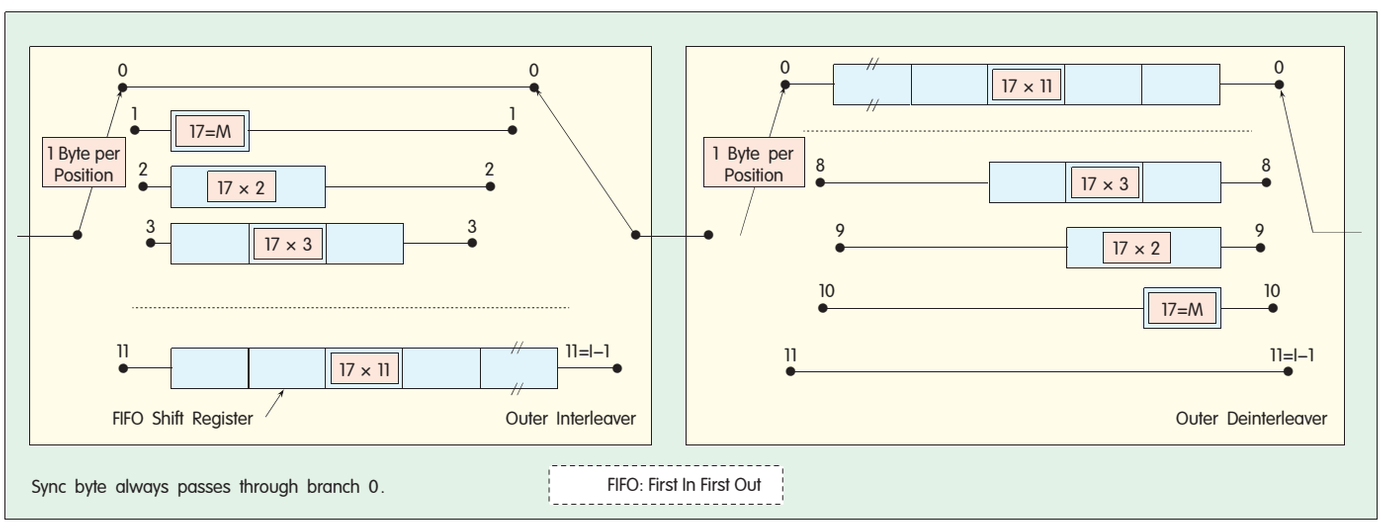

▲Figure 7. Schematic diagram of convolutional interleaver.

D:\EMAG\2007–09–15/VOL4\OA1.FIT——6PPS/P5

coverage intention as required at any time.

T-DMB adopts the SFN technology to implement an effective and reliable coverage for service areas.

3 Feasibility Analysis of Deploying Mobile TV Service

3.1 Problems

The following problems are faced while deploying mobile TV service:

(1) Standard Problem

China is now stipulating its own DTV terrestrial transmission standard and will probably release the related mobile TV standards.

(2) Frequency Resource Problem

When analog TV is completely closed, the vacant hundreds of megabytes frequency resource (VHF, UHF) will effectively alleviate the spectrum scarcity. However, in the transition period, the coexistence of analog and digital broadcasting will worsen the already existing shortage of frequency resource.

(3) Regulation Problem

Generally, the broadcasting and communications fields in each country have different requirements, and they are also managed by different government departments. Each country places strict restrictions on the enterprises in the related fields.

(4) Terminal Problem

It is necessary to solve the terminal problems such as low network transmission rate, short battery life and small-sized design.

3.2 Operation Modes

Mobile TV service may have multiple operation modes. Based on China's conditions, it can be operated in three modes: independent operation by mobile operators, independent operation by broadcasting and TV operators, and joint operation by the above two. The following is a brief analysis of the three modes.

(1) Independent Operation by Mobile Operators

Mobile operators invest in building mobile digital broadcasting and TV networks. However, this case may occupy part of the frequency bands available for analog TV, which needs to get approval of the State Administration of Radio, Film and Television (SARFT). However, the approval is difficult to obtain, and it's also difficult to get the operation license for broadcasting and TV services.

(2) Independent Operation by Broadcasting and TV Operators

Benefiting from related policies of the Chinese government, broadcasting and TV operators are superior in running mobile TV service. It can build a digital broadcasting network oriented to mobile devices to deliver mobile TV services to mobile subscribers. Additionally, it can complete content making, editing and channel integration. As current broadcasting and TV networks only provide downlink paths, they can neither support user authentication and accounting, nor offer personalized services such as customized and interactive programs.

(3) Joint Operation

Broadcasting and TV operators act as the downlink network supplier and content provider of mobile TV services while mobile operators provide the uplink network and are responsible for operations including user authentication, accounting, service customization and program interaction. Besides, mobile operators can use the BCMCS/MBMS technologies to provide on-demand services as a supplement to broadcasting services through the mobile network.

4 Conclusions

The growing technologies make the boundary of the broadcasting and TV and communications industries blurrier.

The mobile operator is the controller of terminals and telecom paths while the broadcasting and TV operator is the audio/video content provider. Both of them are necessary for mobile TV service.

In fact, both the streaming TV based on mobile networks and the broadcasting mobile TV based on wireless digital TV technology need the cooperation of the two operators.

In terms of policies, the broadcasting and TV operator owns both the license to run mobile TV services and the mobile TV program copyright while the mobile operator controls the mobile network to carry mobile TV services. Presently, only through the joint cooperation of the two, can mobile TV service be deployed.

In terms of services, the mobile operator deploys streaming TV services that need the content support from the broadcasting and TV operator; the broadcasting and TV operator rolls out the broadcasting mobile TV that needs the handset user management system supplied by the mobile operator to complete service accounting and customer after-sales service.

In terms of subscribers, low priced but high quality broadcast services, as well as personalized interactive services, are desired. Therefore, there exists the basis and necessity for the two operators to cooperate, and the related departments shall strengthen communication to jointly work towards feasible cooperative solutions.

Mobile TV is an important attempt for the convergence of communications and broadcasting and TV industries. The coordination of supervision departments and the establishment of technical standards will directly affect the progress of triple play in the future.

Biographies

Yan Binfeng received his Doctoral degree from Tsinghua University. He works at the Technical Department of China Unicom Co. Ltd., and has been engaged in the research on 3G services and core networks.

Zhang Zhijiang, Post Doctor, is the General Manager of the Technical Department of China Unicom Co. Ltd. He has been appointed as a member of the Expert Group on Information Security of China's 863 Program. He is engaged in the research on computer and communications networks, and network security.

D:\EMAG\2007-09-15/VOL4\OA1.FIT——6PPS/P6