SPECIAL TOPIC

Research and Development of New Broadband Wireless Access System

Abstract:
Broadband Wireless Access (BWA) has become one of the major evolution trends in the fields of broadband access and mobile communications. However, some difficulties emerged during the application and industrialization of the BWA system, which calls for typical service models, key technology innovations and backbone support from broadband Internet. This article introduces a Broadband Wireless Multimedia (BWM) access system. It aims to build a new-type "triple play" BWA network by integrating terrestrial digital TV system and the BWA system, and by taking broadband Internet as its core network platform. A primary research shows that the new BWA system is an effective solution to the existing difficulties of BWA system. Moreover, it is quite competitive in service provision, service coverage, frequency planning, terminal power consumption and cost for network construction.

Zhang Xiaodong[1]
Bu Zhiyong[2]
You Xiaohu[3]
(1. Shanghai Research Center for Wireless Communications, Shanghai 200050, China;
2. Jushri Technologies, Inc., Shanghai 200050, China;
3. State Key Laboratory of Mobile Communication, Southeast University, Nanjing 210096, China)

IEEE 802.16 task group has released two Broadband Wireless Access (BWA) standards: IEEE 802.16, aiming at fixed access modes, and IEEE 802.16e, aiming at mobile access modes. It started to draft IEEE 802.16j [1-3] at the beginning of 2006, which is a new BWA standard based on relay topology.

China started an influential mobile communication research plan called FuTURE, in 2003. Since then, China has selectively listed key BWA technologies to be tackled. One after another important achievement has been accomplished, and quite a lot of intellectual properties have been accumulated. Meanwhile, China's standardization organizations started to map out industrial standards associated to IEEE 802.16. At present, relevant national standards are under preparation.

Here are some typical standardization organizations from China: the BWA working group, jointly established by National Development and Reform Commission (NDRC), Ministry of Information Industry (MII) and Ministry of Science and Technology (MST); China Communications Standards Association (CCSA) TC5 WG3; and Standardization Administration of China (SAC) Broadband Wireless Multimedia (BWM) standard working group.

The SAC BWM standard is obviously different from other typical BWA system standards in terms of positioning. The BWM implements inner convergence of homegrown BWA system and terrestrial digital TV system. Its fundamental technology mainly comes from FuTURE research plan, China Next Generation Internet (CNGI) research plan and China homegrown mobile TV standard. Furthermore, it also absorbs advantages of IEEE 802.16 standards to some extent. The BWM standard recommends Ultra High Frequency (UHF), although it can also support other frequency bands (such as 3.5 GHz).

As for operation modes, broadcast TV system may be operated separately from the BWA system. Joint operation of these two systems is also supported. Therefore, it is an effective wireless "triple play" solution.

As for core network, the intelligent node overlay network, which is based on Point-to-Point (P2P) Session Initiation Protocol (SIP), is recommended. The overlay network is a QoS-guaranteed virtual network, overlaid on public Internet. Besides, the NGN/IMS interface is supported. The air interface adopts Generalized Multi-Carrier (GMC) technology, which targets for low power consumption optimization, in the uplink direction.

1 Key Technologies for BWM Access Network

1.1 Wireless Network Architecture

The BWM system has to solve the problem of resource coordination and unified transmission of broadcast TV and BWA systems. Therefore, the BWM system has to make full use of the existing resources of terrestrial digital TV

D:\EMAG\2007-09-15/VOL5\F8.FIT——5PPS/P1

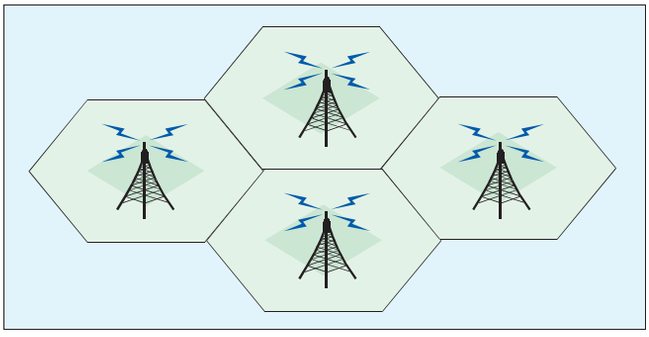

◀Figure 1. Large-cell coverage mode.

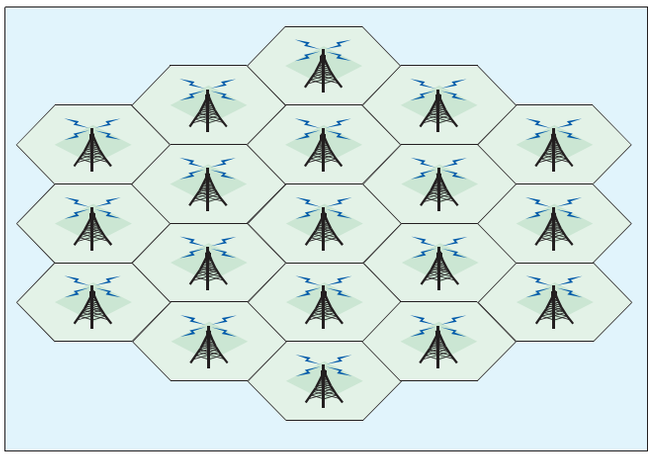

◀Figure 2. Small-cell coverage mode.

network and wireless Metropolitan Area Network (MAN), realizing convergence of the network architectures. The BWM network provides three topologies to support broadcast TV and BWA services.

1.1.1 Large-Cell Coverage Mode

The large-cell coverage mode is popular in existing terrestrial digital TV system, which provides the wireless network for broadcast TV services. The BWM system inherits this technology. As required, it can also support multi-cell Signal Frequency Network (SFN) to provide regional broadcast TV services. The corresponding network topology is shown in Figure 1.

According to the technical features of the BWM system, the large-cell coverage mode may be deemed as either an independent operation mode or a pre-deployment mode in which it is converged with the BWA network. In the second operation scenario, once the BWA network, which has the small-cell coverage mode, is deployed and becomes the main body of the whole system, the large-cell coverage mode of the BWM system may be transited to the large- and small-cell mixed coverage mode to provide broadcast TV and BWA services.

1.1.2 Small-Cell Coverage Mode

The small-cell coverage mode is the premise for the BWM system to provide two-way services. According to practical operation demands, the small-cell coverage mode may be further divided into hotspot coverage and cellular coverage. The cellular coverage mode is similar to the one used in traditional mobile communication cellular networks. Based on small-cell coverage mode, the BWM system can also support SFN topology within a certain range to provide broadcast TV services. Therefore, the small-cell coverage mode will be one of the main networking modes when BWM system is put into commercial operation. The corresponding network topology is shown in Figure 2.

Based on the small-cell coverage mode, the BWM system may provide integrated services, including broadcast TV and BWA services, to some extent. This wireless network planning mode is compatible to the traditional cellular mobile communication architectures. Hence, it's possible that the BWM system will use the same sites used by 2G and 3G.

1.1.3 Large- and Small-Cell Mixed Coverage Mode

The large- and small-cell mixed coverage mode is the wireless networking mode recommended for the BWM system. The corresponding network topology is shown in Figure 3. In this mode, broadcast TV services are provided by the terrestrial digital TV system, which adopts the large-cell coverage mode, while BWA services are provided by the small-cell coverage mode. Having a region-oriented coverage, broadcast TV system does not care about network capacity much. Therefore, macro-cell base stations adopted in this mode can not only avoid the overhead for base station synchronization and cell handover, but also greatly reduce the cost for both system networking and equipment.

The large- and small-cell mixed coverage mode is a new technology in

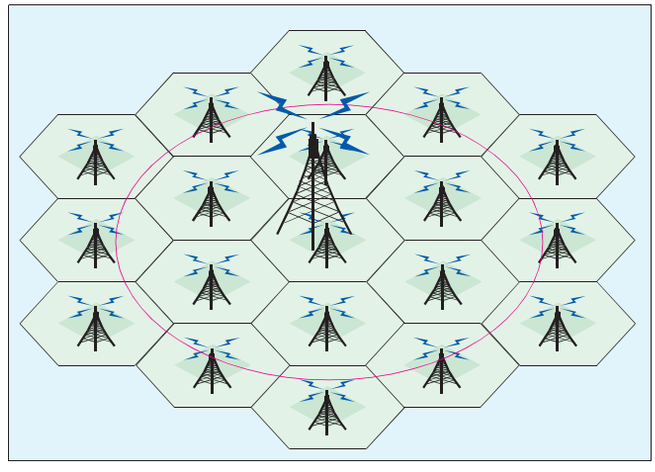

Figure 3. ▶ Large- and small-cell mixed coverage mode.

D:\EMAG\2007-09-15/VOL5\F8.FIT——5PPS/P2

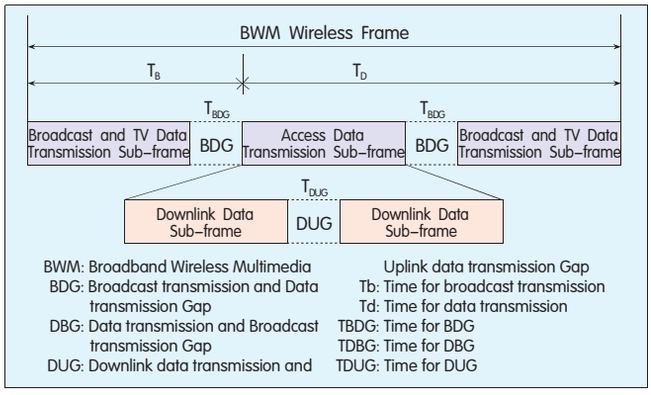

◀Figure 4. Structure of wireless frame shared by broadcast TV and BWA.

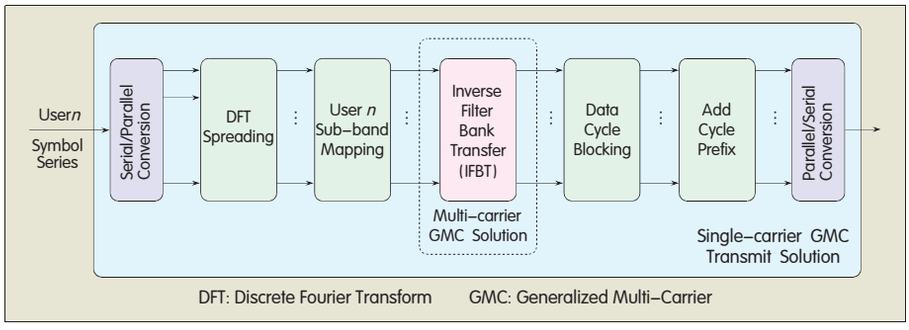

▲Figure 5. GMC transmitter principle diagram.

the BWM system. Therefore, its feasibility needs to be verified through a trial-and-error process.

1.2 Key Technologies for Physical Layer

At the physical layer, the BWM system mainly uses multiple access, broadcast and other enhanced technologies (such as Multiple Input Multiple Output (MIMO), Adaptive Modulation and Coding (AMC) and Hybrid Automatic Repeat Request (HARQ)). This article will introduce multi-address and broadcast technologies.

1.2.1 Wireless Frame Structure

At air interface of the BWM system, a wireless frame consists of broadcast TV data and BWA data. Both share the frame resources by the Time Division Multiplexing (TDM) mode, as shown in Figure 4. Moreover, BWA data is divided into uplink data (UL) and downlink data (DL) to implement Time Division Duplex (TDD) for two-way communications.

1.2.2 Uplink Multi-Address Solution

UL capability is traditionally weak than DL capability due to asymmetric UL and DL bandwidth. As the Web2.0 era is coming, the UL/DL asymmetric phenomena will disappear. An enhanced UL multi-address solution is urgently desired to improve transmission capability. The BWM system adopts GMC multi-address solution for uplink accessing, which is an achievement of the FuTURE plan. The solution has equivalent overall performance to international mainstream technologies. Moreover, it declares robust and stable transmission performance. Figure 5 illustrates GMC transmitter principle used in the BWM system.

Compared to IEEE 802.16e Orthogonal Frequency Division Multiple Access (OFDMA) solution, GMC solution is better in small calculation amount, and has less hardware complexity.

(1) Compared to OFDMA, GMC transmitter generates higher Peak-to-Average Ratio (PAR), reaching 2-4 dB.

(2) GMC sets frequency domain protection sub-band and time domain cycle prefix for transmitting signals so that there is lower requirement for accuracy of transmitter synchronization than in the OFDMA solution.

(3) GMC can effectively suppress multi-address interference due to near-far effect, poor synchronization or poor power control. In other words, GMC ensures robust and stable transmission performance.

1.2.3 Downlink Multi-Address Solution

Currently, OFDMA multi-address technology is widely recognized as the best downlink solution for broadband wireless communications due to its easy implementation and integration of other enhanced technologies such as MIMO. After extensive discussions, this technology is still recommended by the BWM standard working group. Additionally, Unified Multiple Input Multiple Output (U-MIMO), one of the FuTURE plan achievements, is hopefully absorbed as a BWM solution for multi-antenna transmission. This aims to effectively improve throughput of system and terminals, and moderately restrain fading effect of mobile channels. Figures 6 and 7 show the typical OFDMA Tx principle and MIMO transmission principle, respectively.

Compared to other MIMO transmission technologies, U-MIMO owns the following technical advantages:

(1) Strong Environment Adaptability

Based on environment detection mechanism, it is easy to meet communication requirements in a situation where spatial correlation is various.

(2) Simple Tx and Detection Algorithm

Pre-coding mechanism is used to generate Tx data in unified form. 2-D detection of space-time signals is based on MMSE/SIC. Therefore, the algorithm is not very complicated.

(3) Separate Channel Coding from Space-time Transmitting/Detecting

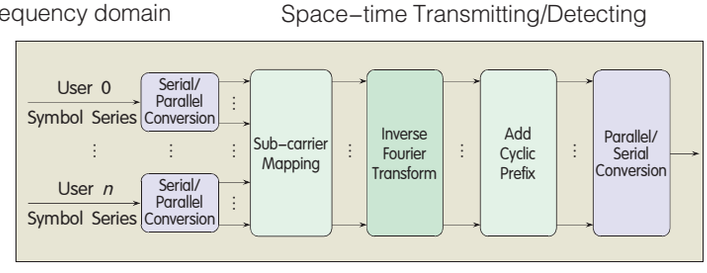

Figure 6.▶ OFDMA Tx principle.

D:\EMAG\2007-09-15/VOL5\F8.FIT——5PPS/P3

Algorithm.

With GMD orthogonal transformation, spatial multi-stream shares the same rate of channel coding stream, which obviously reduces the pressure on closed-loop power control and feedback signaling channel.

1.2.4 Downlink Broadcast Solution

The wireless frame structure shows that both broadcast data and BWA data adopt the TDM mode to implement multiplexing. According to the draft assessment, this multiplexing structure makes the separate operation of broadcast and BWA services easy. Accordingly, it mostly needs to reduce coupling and mutual dependency between downlink broadcast and BWA solutions. If so, the published innovative achievements can be largely reused in the area of mobile TV and BWA. Finally, the technology and industry win-win goal is surely fulfilled.

STiMi, recently issued by the State Administration of Radio Film and Television (SARFT) of China, is a homegrown mobile TV standard. It is based on an OFDMA industrial standard, named Broadcast Channel Frame Structure, Channel Coding and Demodulation. The STiMi is converged with the BWA system at the level of parameter design (such as bandwidth setting) and partial technology. In principle, the BWM system may be converged with other terrestrial digital TV systems, which is completely determined by operation requirements. Therefore, it is flexible. However, details will not be described here.

1.3 Key Technologies for MAC Layer

As a center for wireless resource management, Media Access Control (MAC) protocol and relevant technologies determine the efficiency and robustness of the entire access network. Aiming at the packet domain, IEEE 802.16e specifies signaling structure and QoS architecture for the MAC layer. Wireless resource scheduling policies are taken to fulfill full-service scheduling and controlling functions. This effectively releases the pressure to increase the cost of hardware supporting system while implementing functions in the circuit domain or circuit and packet mixed domain. To sum up, it should be recognized as a milestone during the development of new generation broadband wireless communication networks.

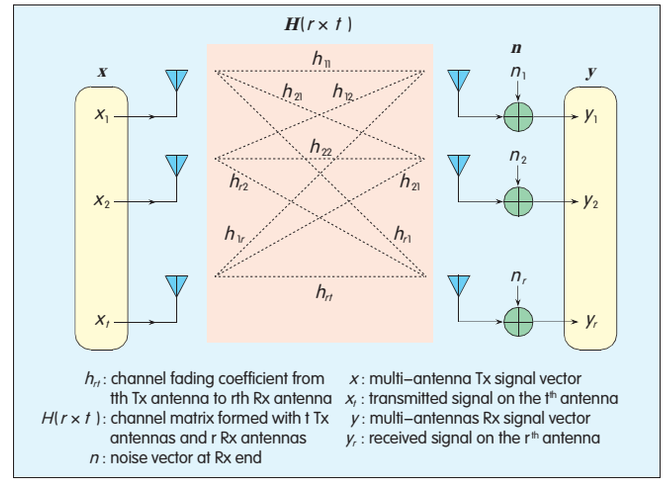

Figure 7. MIMO transmission principle.

In the BWM system, IEEE 802.16e is mostly taken as reference to design signaling structure and QoS architecture of MAC stack. Since mobile TV services have special requirements, MAC stack is redesigned to integrate both broadcast TV and BWA services, called Convergence Media Access Control (CoMAC) stack. Figure 8 shows the basic structure of CoMAC.

In general, CoMAC stack has the following technical features:

(1) Three typical sub-layer classification: Network Adaptation Sub-layer (NAS), Media Control and Management Sub-layer (MCMS) and Security Sub-layer (SES).

(2) In principle, QoS architecture supports four service classes: Unsolicited Grant Service (UGS), Real-Time Polling Service (RTPS), Non Real-Time Polling Service (NRTPS) and Best Effort (BE) service. Mobile TV service belongs to UGS, but it is initiated at the network side.

(3) The whole signaling system is connection oriented. Dynamic stream is adopted to manage all connections.

(4) All packet services are managed and scheduled by MCMS. MCMS is also responsible for mobile handover and wireless resource management.

2 Research Progress

China started general research on the BWM system in 2004. Some key technologies were verified on FuTURE field test in the second half of 2006. After that, aiming for more achievements, a BWM field demonstration in Chongming Island was planned. This was also used as a verification field by SAC to draft BWM standards. This plan was supported by three Shanghai municipal departments, namely the Science and Technology, Development and Reform, and Information Commissions, with kind efforts. The main participants were Shanghai Research Center for Wireless Communications, Shanghai Institute of Microsystem and Information Technology, and Jushri Technologies. There were also other institutes involved: other institutes in Chinese Academy of Sciences, SAC, Southeast University, Tsinghua University, and Shanghai Jiao Tong University. At the same time, the corresponding equipment and software system for the BWM system were also researched and developed. This includes core chips, which would exert tremendous actions in future industry.

Up to now, the first phase of the BWM field demonstration in Chongming Island is being constructed. In this phase, the BWA network covers main scenic spots of the island. However, broadcast TV and broadband access services cannot be organically integrated yet. That is to say, the first phase network is being constructed based only on the BWA technology. Figure 9 basically describes the first phase network coverage. According to the plan, a "triple play" BWM system is expected to be demonstrated in Chongming Island by

D:\EMAG\2007-09-15/VOL5\F8.FIT——5PPS/P4

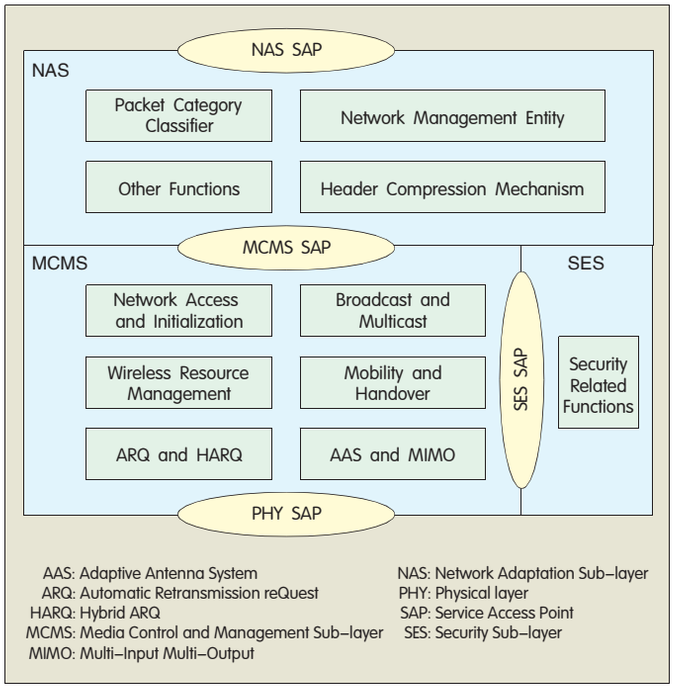

◀ Figure 8. CoMAC stack structure.

the end of 2007.

3 Conclusions

This article introduces the latest achievements accomplished by the SAC BWM standard working group. A wireless "triple play" solution is proposed, through which, broadcast TV services can be organically integrated with BWA services. Some key technologies are briefly introduced from the aspects of network, transmission and protocol. At present, the R&D on BWM system is under the stage of standard formulation and verification. The industry alliance has not been established. Therefore, there is still a long way to fulfilling the industrialization of BWM system.

References

[1] IEEE 802.16-2004. IEEE Standard for Local and Metropolitan Area Networks, Part 16: Air Interface for Fixed Broadband Wireless Access Systems [S]. 2004.
[2] IEEE 802.16e-2005. IEEE Standard for Local and Metropolitan Area Networks, Part 16: Air Interface for Fixed and Mobile Broadband Wireless Access Systems [S]. 2005.
[3] GY/T 220.1-2006. Mobile Multimedia Broadcasting, Part 1: Broadcast Channel Frame Structure, Channel Coding and Demodulation [S]. 2006.

Biographies

Zhang Xiaodong is an assistant to director and the vice chief engineer of Shanghai Research Center for Wireless Communications. He is also a researcher at the Shanghai Institute of Microsystem and Information Technology. He has successively participated in 10 national-, provincial- and ministry-level projects. Up to now, he has published more than 30 technical papers, and applied for more than 30 national and 3 international invention patents.

Bu Zhiyong is the vice director of Shanghai Research Center for Wireless Communications, a researcher at the Shanghai Institute of Microsystem and Information Technology, and the president of Jushri Technologies, Inc., Shanghai. He has successively participated in or led several national-, provincial- and ministry-level projects. By now, he has published more than 20 technical papers, and applied for more than 20 national invention patents.

You Xiaohu is the dean of Information Science & Engineering College of Southeast University. He is also a doctoral supervisor and the dean of State Key Laboratory of Mobile Communication, Southeast University. He is a chair professor of Cheung Kong Scholars, and is titled National-level Young- and Middle-aged Expert with Outstanding Contribution. He has been engaged in R&D of wireless mobile communications for a long time. He was appointed as a group leader for national 3G mobile communication system R&D project from 1999 to 2002. Currently, he is appointed as both a vice leader of Communication Technology Expert Group and a leader of FuTURE Mobile Communication General Expert Group of the 863 program of China.

▲ Figure 9. Phase 1 of BWM field demonstration in Chongming Island.

D:\EMAG\2007-09-15/VOL5\F8.FIT——5PPS/P5