SPECIAL TOPIC

Progress of 3GPP LTE Standardization

Abstract:
The 3rd Generation Partnership Project (3GPP) initiated its Long Term Evolution (LTE) standardization work to retain its technology and standard advantages in the field of mobile communications. A series of advanced technologies and novel concepts related to the physical layer (Layer 1), air interface protocol structure layer (Layer 2) and network architecture are adopted. Solutions to Voice over IP (VoIP) and Multimedia Broadcast/Multicast Service (MBMS) are in the optimization process. 3GPP LTE has achieved the design goals of high data rate, low latency and an all-packet basis.

Xu Jing
Hu Honglin
Zhou Ting
(Shanghai Research Center for Wireless Communications, Shanghai 200050, China)

In order to meet the challenge of broadband access technology, and to satisfy the requirements for new services, the international standardization organization, the 3rd Generation Partnership Project (3GPP), initiated its Long Term Evolution (LTE) standardization work at the end of 2004. The LTE has the following goals:

(1) Retaining 3GPP's strengths in mobile communication technology and standardization

(2) Filling the huge gap between 3G and 4G mobile communication technologies

(3) Maintaining the benefits of spectrum resources by utilizing the spectrum allocated to 3G mobile communication systems

(4) Correcting the over-concentration of the patent rights for 3G mobile communication systems

There are two phases in the schedule of 3GPP LTE: the study phase from December 2004 to June 2006; and the phase for accomplishing the LTE standardization from June 2006 to June 2007. However, the study phase was extended until September 2006 because of some problems left unsolved. The standardization process of 3GPP LTE, which is initially aimed at evolving the 3rd generation mobile communication system, is indeed a technological revolution process due to service demands, competition from other technologies, and pressure from operators. Compared with the 3rd generation mobile communication system, 3GPP LTE has revolutionized the physical layer (Layer 1) transmission technologies[1], the air interface protocol structure layer (Layer 2), and network architecture[2].

1 Evolution Purposes of 3GPP LTE

3GPP LTE is fulfilling an all-packet-based mobile communication system with high data rate and short latency. Its basic purposes[3] are as follows:

(1) Flexible Spectrum Bandwidth Configuration

The LTE system shall support the bandwidth configuration of 1.25 MHz, 1.6 MHz, 2.5 MHz, 5 MHz, 10 MHz, 15 MHz and 20 MHz. In this way, the system can technologically use the spectrum of the 3rd generation mobile communication system.

(2) Improved Transmission Rate at Cell Edge

Both transmission rate and user experience at the cell edge shall be improved to enhance the coverage performance of 3GPP LTE system. This purpose can be fulfilled by Frequency Division Multiple Access (FDMA) and inter-cell interference suppression techniques.

(3) Date Rate and Spectrum Utilization

In terms of data rate and spectrum utilization, the system enables a peak downlink rate of 100 Mb/s and a peak uplink rate of 50 Mb/s. Compared to the High Speed Packet Access (HSPA) system, it has 2 to 4-fold increase in both spectrum utilization and average user throughput. Multi-antenna technology, adaptive modulation and coding, and frequency selective scheduling based on channel quality are adopted to ensure the strengths of 3GPP LTE system in the field of spectrum utilization.

(4) Latency

The LTE system enables less than 5 ms one-way transmit time in the user plane. It also supports less than 50 ms transition time for the control plane from a dormant state to an active state, and less than 100 ms transition time from a camped state to an active state. Therefore, it has a strong support for real-time services.

(5) Various Multimedia Broadcast and Multicast Services Support

D:\EMAG\2007-09-15/VOL5\F3.FIT——5PPS/P1

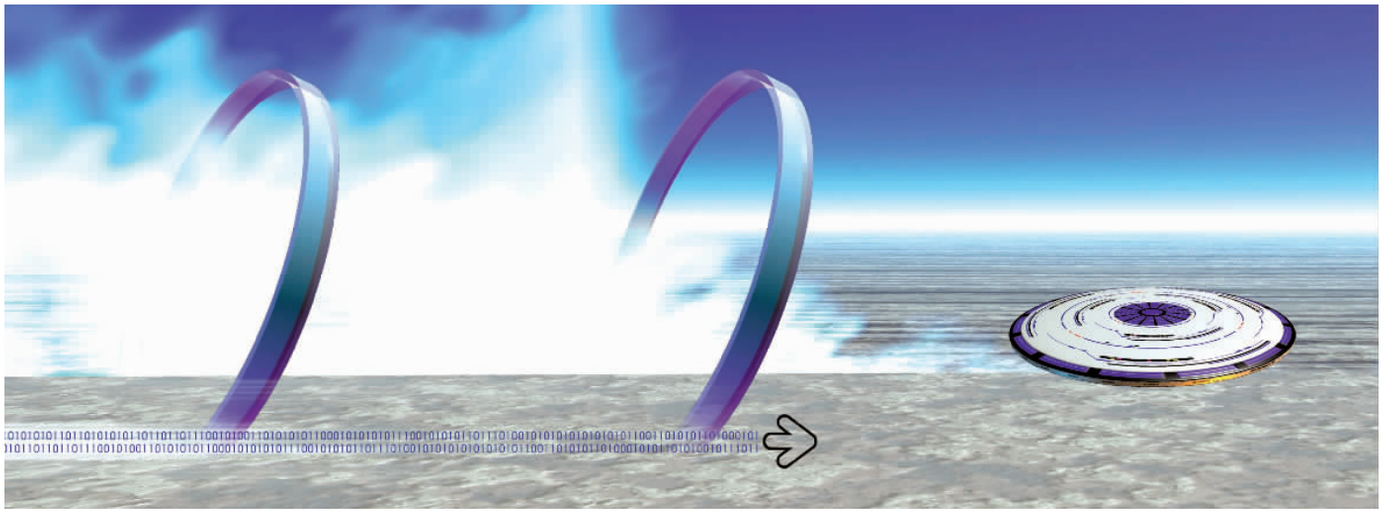

It enhances the support of multimedia broadcast and multicast services to meet the demand of their integration. The frame structure of the physical layer, channel structure of Layer 2 and upper-layer radio resource management help achieve this goal.

(6) All Packet Switching

The LTE system uses all packet switching to improve system spectrum utilization. However, its support for Voice over IP (VoIP) services and small delay make it difficult for scheduling and signaling design between Layers 1 and 2.

(7) Co-existence

The system can co-exist with the third generation and other mobile communication systems.

2 Transmission Technologies for Physical Layer of 3GPP LTE System

2.1 Uplink/Downlink Transmission Schemes for Physical Layer

The Orthogonal Frequency Division Multiple Access (OFDMA) technology is used for downlink transmission while the Single-Carrier Frequency Division Multiple Access (SC-FDMA) technology is used for uplink transmission. The sub-carrier interval is 15 kHz. SC-FDMA is a single-carrier transmission technology based on Orthogonal Frequency Division Multiplexing (OFDM). It features a low peak-to-average power ratio. Both OFDMA and SC-FDMA are able to support frequency selective scheduling well.

2.2 Frame Structure

Each frame on both uplink and downlink is 10 ms, and has 20 slots and 10 sub-frames, with a minimized physical resource block of 180 kHz.

In order to support broadcast and unicast services, both long frame Cyclic Prefix (CP) and Short CP are designed for downlink transmission. Each short CP sub-frame comprises seven OFDM symbols and mainly supports unicast services. Each long CP sub-frame has six OFDM symbols and 16.67 ms duration. It supports multicast services, helps implement single-frequency networking, and achieves the combined gain of multi-cell transport.

Each uplink sub-frame consists of eight OFDM symbols: two short OFDM symbols and six long OFDM symbols. The short OFDM symbols are responsible for transmitting pilot signals while the long ones are used for data transmission.

Additionally, in order to co-exist with the Time Division Duplex (TDD) system, the LTE system has special frame structures for Low-Chip-Rate Time Division Duplex (LCR-TDD) and High-Chip-Rate Time Division Duplex (HCR-TDD).

2.3 Inter-cell Interference Control Technology

Inter-cell interference control technology is used to increase the information transmission rate at the cell edge. Major multi-cell interference compensation technologies include interference randomization, interference cancellation and multi-cell interference coordination. Early research work on 3GPP LTE standardization focused on the multi-cell interference coordination technology for downlink Frequency Division Duplex (FDD) system. This technology is used to apply restrictions to the frequency resources and transmit power. The users at the cell center can utilize all resource blocks, but they are required to use low power when they enjoy certain resource blocks. On the other hand, the users at the cell edge can utilize certain resource blocks in full power, accordingly improving the cell-edge Signal-to-Interference-plus-Noise Ratio (SINR) and cell coverage. The uplink multi-cell interference control in the FDD system is implemented by power control technology, with the frequency reuse factor of 1.

2.4 Multi-antenna Technology

Currently, the single-user downlink multi-antenna prefers no disturbance among layers. This is implemented by unitary-matrix-based pre-coding technology, with terminal feedback being the unitary matrix index. Other multi-antenna technologies are for further research.

The downlink multi-user multi-antenna prefers unitary-matrix-based terminal feedback, but not all pre-coding matrices of the base stations are unitary matrices.The evaluation and selection of uplink

D:\EMAG\2007-09-15/VOL5\F3.FIT——5PPS/P2

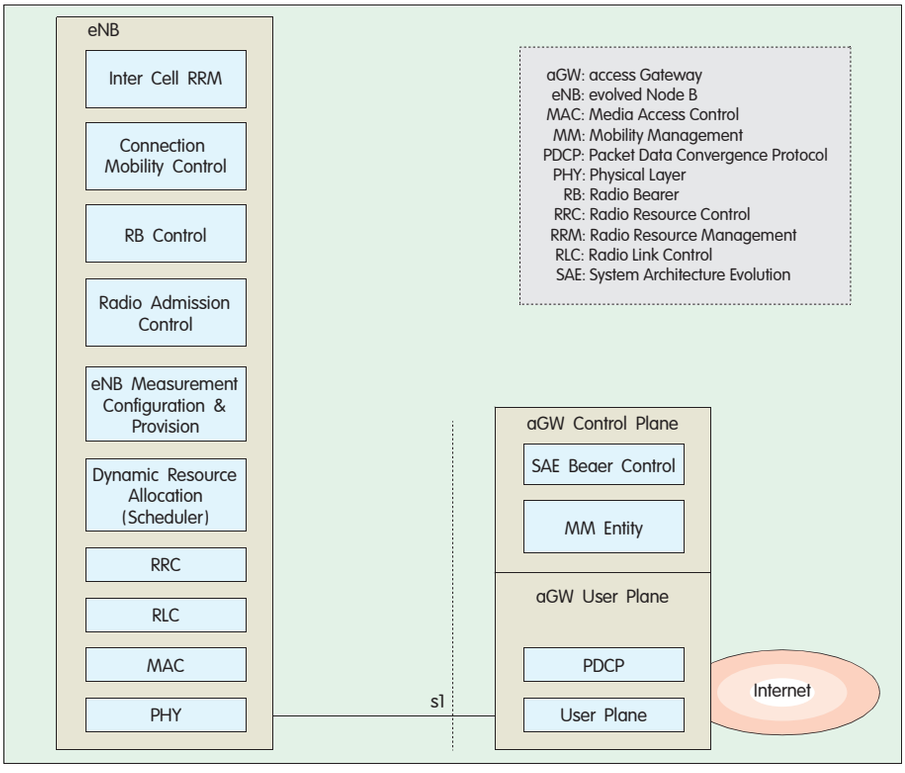

▲Figure 1. Architecture and functions of 3GPP LTE network.

transmit diversity mainly rely on the power amplification requirements.

2.5 Cell Search Technology

The design of cell search focuses on synchronized channels and cell sequence. Considering the complexity of cell search, LTE inclines to use the major synchronized channel for cell synchronization, and the secondary synchronized channels for cell ID detection. Common pilot sequence is adopted in the major synchronized channel while different pilot sequences are adopted in the minor synchronized channels of different cells. As for the design of cell pilot sequences, requirements on both performance and complexity should be taken into consideration. At present, referenced code types include PN, Zadoff–Chu and Frank.

2.6 Random Access Technology

Random access is classified into non–synchronized random access and synchronized random access.

As for non–synchronized random access, the user message bits, such as user access destination and user Channel Quality Indicator (CQI), are concealed behind the user signature sequence to improve the base station's control efficiency of user access. The user signature sequence adopts the Zadoff–Chu Zero Correlation Zone (ZC–ZCZ) code. There is a contention on whether a longer code or a simple short code repetition should be used for the coverage of a large cell. LTE prefers the latter in consideration of the complexity of, and resistibility to, frequency offset.

There are few discussions on synchronized random access. In terms of functionality, many companies have recommended to cancel the channel for synchronized random access. As resource requests from users can be delivered to the base station through a vast of transport modes, the need to design a synchronized random access channel for the synchronized users to send resource requests is eliminated.

3 3GPP LTE Network Architecture

The 3G network consists of four network nodes: Node B (NB), Radio Network Controller (RNC), Serving GPRS Support Node (SGSN) and Gateway GPRS Support Node (GGSN).

The main functions of RNC are radio resource management, network–related functions, maintenance and operation of Radio Resource Control (RRC), and supply of the interface with Network Management (NM) system. However, since many functions related to air interface are located in the RNC, resource allocation and services are not able to adapt to channels. This makes the protocol structure very complicated, and it results in difficult system optimization.

A decision was made at the plenary meeting of 3GPP in March 2006 that the LTE network uses a flat network structure, and consists of evolved Node B (eNB) and Access Gateway (AGW). The main functions of eNB are as follows:

- selecting an AGW in attachment state
- sending paging and broadcast messages
- dynamic allocation of radio resources, including multi–cell radio resource management
- setting and offering eNB measurement
- radio bearer control
- radio admission control
- connection mobility control under active state

Figure 1 shows the network architecture and functions of 3GPP LTE network, in which, the interface between eNB and AGW is S1, and the interface between eNBs is X2. All functions related to air interface are centralized in eNB. The Radio Link Control (RLC), and the Media Access Control (MAC) are implemented by the same network node. This facilitates combined optimization and design.

4 Layer 2 Standardization

4.1 Layer 2 Technology Overview

In order to formulate a unified standard, the Layer 2 standard does not consider the difference between FDD and TDD. That is to say, FDD and TDD are expected to be converged and integrated in Layer 2.

The all–packet–based protocol results in a greatly simplified 3GPP LTE

D:\EMAG\2007–09–15/VOL5\F3.FIT——5PPS/P3

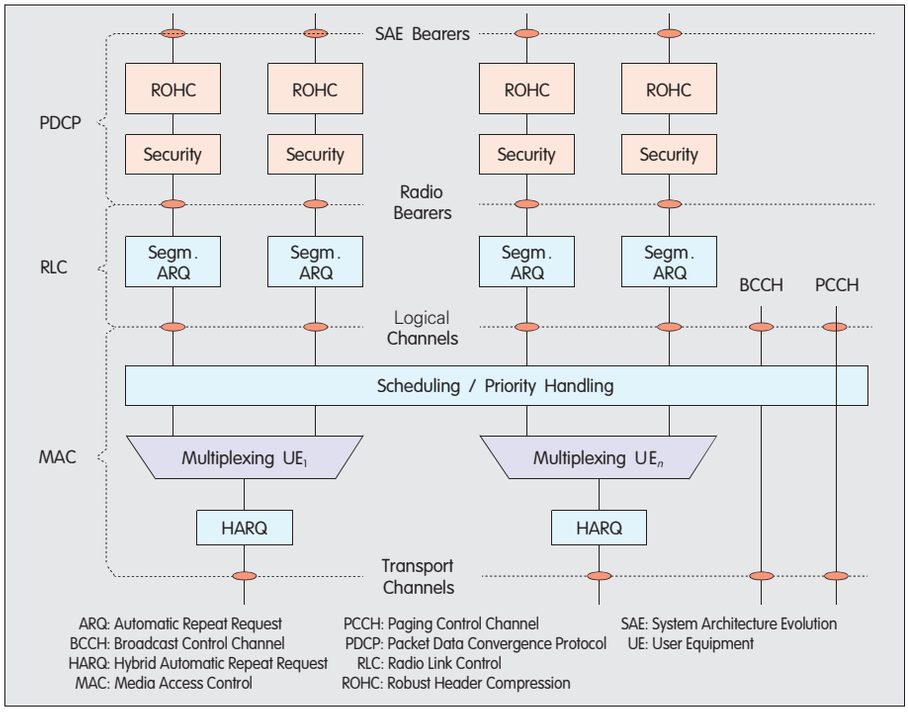

▲Figure 2. Downlink protocol structure of Layer 2.

protocol structure. As both RLC and MAC are located at eNB, the scheduler can divide Service Data Units (SDU) according to the channel quality. This helps reduce padding, and it maximizes the channel transmission capability. It also enables combined optimization for Automatic Repeat Request (ARQ) at the RLC layer and Hybrid Automatic Repeat Request (HARQ) at the MAC layer.

4.2 Layer 2 Protocol Structure

Figure 2 shows the downlink protocol structure of Layer 2, which is very simple due to the elimination of circuit switching.

Compared to 3G protocols, the LTE protocol has a structure with HARQ and ARQ entities located at the eNB. The length of RLC SDU is changeable. Besides, the LTE protocol supports re-segmentation of RLC Protocol Data Units (PDU), enabling the service payload to adapt well to channel quality.

On the other hand, as the rigorous delay requirement asks for small filling, 3GPP LTE Layer 2 protocol supports multiplexing of several radio bearers belonging to the same terminal at the MAC layer.

Figure 3 shows that the LTE-preferred RLC and MAC structure, which can well solve the overhead problem resulting from the rigorous delay requirement.

4.3 Design Ideas of ARQ, and ARQ and HARQ Cooperation

ARQ and HARQ ensure the reliable transport of most important data. In 3GPP LTE system, both ARQ and HARQ are located at the eNB, which facilitates combined design of the system.

The ARQ protocol is greatly simplified in comparison with ARQ of R6. The design ideas of ARQ are as follows:

(1) In order to ensure independency among protocol layers, the RLC and PDCP sequence numbers are independent of each other.

(2) In order to reduce RLC header overhead, both RLC sequence numbers and re-transport of ARQ are based on the RLC PDU.

(3) ARQ re-transport supports re-segmentation (adaptable to channel quality), with re-segmentation times larger than 1.

The cooperation of ARQ and HARQ targets rapid triggering of ARQ re-transport, reducing transport delay of air interface and avoiding wrong activation of Transmission Control Protocol (TCP) owing to ACK/NACK. The cooperation works in this way: HARQ transmit end can trigger ARQ to conduct re-transport once HARQ transmit end discovers a packet transport failure. However, it needs to be researched further whether the HARQ receiving end reports a failure if it finds one, or not.

4.4 VoIP Service Scheduling and Signaling

VoIP services feature around 20 ms of service arrival interval, 40 bytes of service payload, and 160 ms of silence interval. VoIP services will be a killer application in the long run. Therefore, the 3GPP LTE takes several efforts to optimize VoIP services.

The design principles of VoIP service scheduling are as follows:

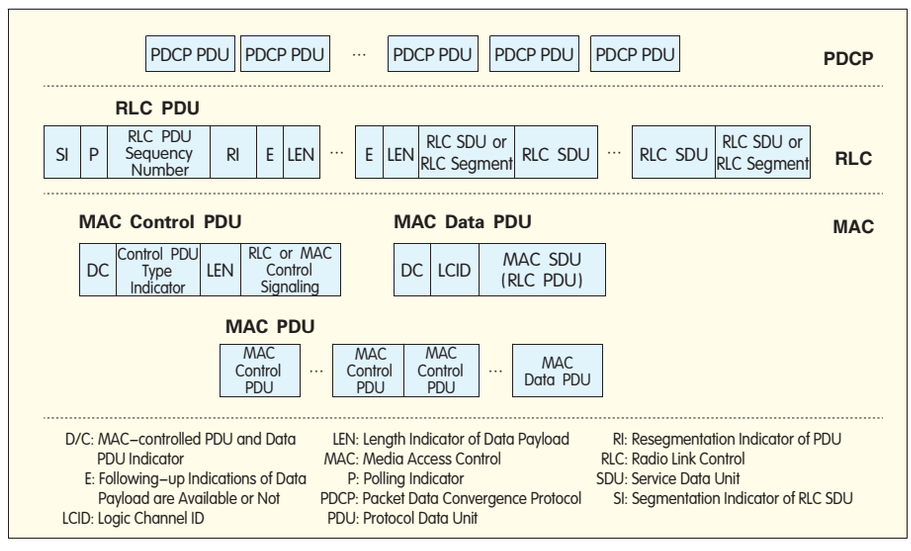

▲Figure 3. Data Format of RLC and MAC.

D:\EMAG\2007-09-15/VOL5\F3.FIT——5PPS/P4

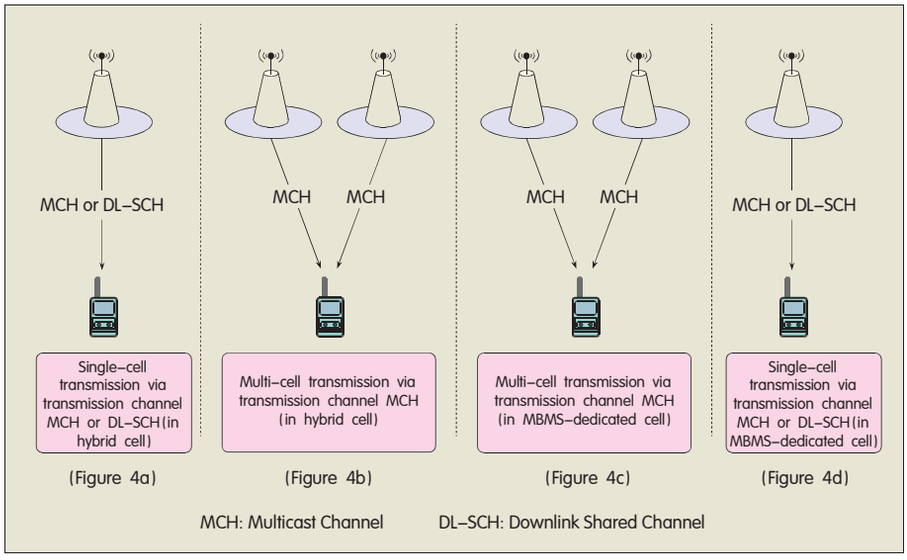

▲Figure 4. Transport modes for multicast services.

(1) VoIP-related signaling overhead should be small (or none at all) due to small VoIP packets and short transport intervals.

(2) The scheduler should support re-allocation of resources in static or semi-static scheduling.

(3) The scheduler is able to deal with VoIP resending and burst of service payload.

However, no consensus has been reached on the design of VoIP service scheduling and signaling.

4.5 Multicast Services

Due to service demands and strong requirements from operators, 3GPP LTE highlights the support for broadcast and multicast services.

If there is the demand on multicast services only in one cell, the services can be transported via the Downlink Shared Channel (DL-SCH). Moreover, the multicast service can use the Multicast Channel (MCH) for transmission to achieve multi-cell transport combining diversity. Figures 4a and 4b show two transport modes in a hybrid cell. Based on operators' demand, the 3GPP LTE also specified two transport modes in MBMS-dedicated cell, as shown in Figures 4c and 4d.

5 Conclusions

In this paper, the process of 3GPP LTE standardization is introduced and analyzed. Many advanced technologies and concepts are adopted in 3GPP LTE to fill the gap between 3G and 4G mobile communication systems. The 3GPP LTE system offers strong support for real-time services, highly-reliable services, and broadcast and multicast services. The standardization process of 3GPP LTE is more like a technological revolution instead of an evolution. It has basically fulfilled its purposes of short delay, all-packet and high data rate.

References

[1] 3GPP, TR 25.814 v7.1.0. Physical Layer Aspects for Evolved UTRA [S]. 2006.
[2] 3GPP TR 25.813 v7.1.0. Evolved UTRA (E-UTRA) and Evolved UTRAN (E-UTRAN): Radio Interface Protocol Aspects [S]. 2006.
[3] 3GPP TR 25.913 v7.3.0. Requirements for Evolved UTRA (E-UTRA) and Evolved UTRAN (E-UTRAN) [S]. 2006.

Biographies

Xu Jing is a PhD from Southeast University. He is an associate researcher at Shanghai Institute of Microsystem and Information Technology, Chinese Academy of Sciences, and is now the director of Broadband Mobile Dept., Shanghai Research Center for Wireless Communications. He is also the project manager of the B3G/4G research and standardization project. His research interests include channel equalization, cross-layer optimization and radio resource management.

Hu Honglin is a PhD from the University of Science and Technology of China and a Post-doctor from Future Radio Dept. of Siemens in Munich, Germany. Now, he is an associate professor at Shanghai Institute of Microsystem and Information Technology, Chinese Academy of Sciences, and is engaged in international standardization and research of key technologies for mobile communications. He has published more than 10 technical papers and four books. He serves as a member of the Editorial Board of Wireless Communications and Mobile Computing, and International Journal of Communication Systems, John Wiley & Sons.

Zhou Ting received her Master's degree from the Department of Electronic Engineering in Tsinghua University, with a major in Information and Communication System. She is working at Shanghai Research Center for Wireless Communications. Her current major research areas include network coding, channel coding and hybrid automatic-retransmission request in cooperative relay system. She has published one technical paper, and applied for two national patents.

Ad Index
A1-A5, Back Cover: ZTE Corporation

D:\EMAG\2007-09-15/VOL5\F3.FIT——5PPS/P5