RESEARCH PAPER

S-MAC Protocol of Wireless Sensor Network

Jiang Xue
(Nanjing University of Posts and Telecommunications, Nanjing 210003, China)

Abstract:
Energy efficiency is the primary issue for the Medium Access Control (MAC) protocol in sensor networks. Adopting periodic sleep, adaptive listen, overhearing avoidance and message passing mechanisms, the Sensor Medium Access Control (S-MAC) protocol improves energy efficiency and latency in the network. There are mainly two methods to enhance the S-MAC protocol: dynamic adjustment, and sending control and data packets under different transport conditions. For the wireless sensor network, it is not realistic to design one MAC protocol that meets all requirements of every aspect; however, it is possible to design corresponding protocols in accordance with different requirements by flexibly adopting different methods.

Wireless Sensor Network (WSN) usually contains a large quantity of self-organizing distributed nodes. Since its networking is simple, flexible and unconstrained by wired networks, it can be widely applied in special cases such as emergency searching, disaster salvation and military applications. Therefore, WSN has a promising future. However, the energy of sensor nodes in WSN is limited. Energy efficiency accordingly becomes the primary issue for Media Access Control (MAC) protocol design in WSN. It can be seen in Reference [1] that Sensor Media Access Control (S-MAC) protocol is designed just to meet the energy efficiency demand of WSN. Periodic sleep, adaptive listen, overhearing avoidance and message passing mechanisms make the S-MAC pretty excellent in network energy-consuming and latency performance, but there's still a long way to go to satisfy all the requirements of practical applications.

1 Introduction of S-MAC Protocol

S-MAC is proposed based on 802.11 protocols, and its major design target is to reduce energy consumption and to provide good scalability. Its main mechanisms include periodic listen and sleep, overhearing avoidance, message passing and traffic-based adaptive listen.

1.1 Critical Technology to Implement S-MAC Protocol

(1) Nesting Structure of Data Packet

Figure1 shows the nesting structure of the S-MAC protocol packet. In S-MAC protocol, the upper layer packet contains the information of lower layer packet. Each layer only assumes the responsibility to deal with the information belonging to it when a packet is received.

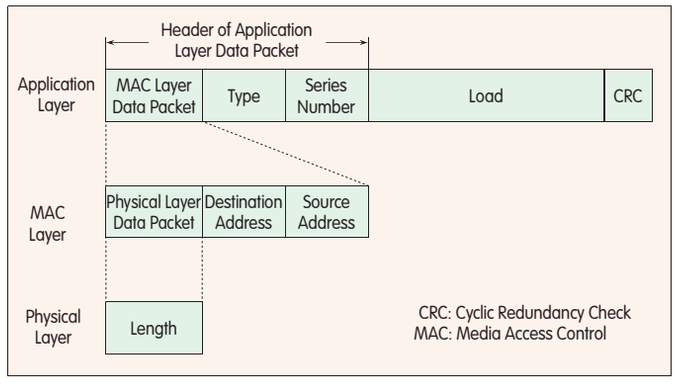

▲Figure1. Data packet format of S-MAC protocol.

(2) Structure and Function of S-MAC Stack

In S-MAC protocol stack, when the MAC layer of a node receives a data packet from its upper layer, the node will start carrier listening. If the result shows the MAC layer as idle, the node will send the packet to the Physical Layer; if the MAC layer is busy, the node will enter the sleeping state, waiting for the next idle time, and the data will be resent by then. When the MAC layer receives a packet from the Physical Layer and finds that there is no error after Cyclic Redundancy Check (CRC), the MAC layer will send this packet to its upper layer. The network model is shown in Figure 2.

(3) Selecting and Maintaining Scheduling Table

Before starting periodic listen and sleep, each node needs to select their sleep scheduling mechanism which must be consistent with that of their neighbor nodes. How do nodes select their schedules and keep the consistency? The following are three ways of selecting and keeping the mechanism:

a. In listening time, if a node does not discover the sleep

This work was funded by the National Natural Science Foundation of China under Grant 60372107.

D:\EMAG\2007-09-15/VOL5\RA2.FIT——4PPS/P1

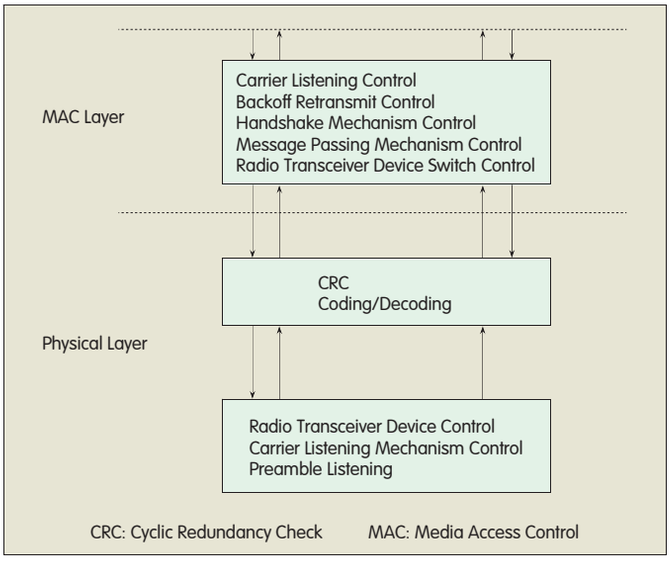

▲Figure2. Network model of S-MAC protocol stack.

scheduling mechanisms of other nodes, it will select a sleep scheduling mechanism immediately;

b. If a node receives a sleep mechanism the neighbor nodes broadcast before selecting and declaring its own scheduling mechanism, it will use the neighbor's sleep scheduling mechanism;

c. If a node receives several different sleep mechanisms after selecting and broadcasting its own sleep scheduling mechanism, the case should be considered in two ways: if one node does not have a neighbor node, it will discard current sleep scheduling mechanism of its own and adopt the latest received one; if this node have one or more neighbor nodes, it will adopt several different sleep scheduling mechanisms simultaneously.

(4) Clock Synchronization

In S-MAC protocol, a node and its neighbor nodes should keep clock synchronization for listening and sleeping simultaneously. S-MAC protocol adopts relative, but not absolute, timestamps, and it also lets listening time much greater than clock error and floating so as to reduce synchronizing errors. Besides, the node will update its own clock in accordance with its neighbor nodes to keep them synchronized.

(5) Carrier Sense Multiple Access/Collision Avoidance (CSMA/CA)

The basic mechanism of CSMA/CA is to establish a handshake mechanism to transfer data between the sender and the receiver. This handshake mechanism works as follows:

a. A sender sends a Request-to-Send (RTS) packet to its receiver, and the receiver replies a Clear-to-Send (CTS) packet to the sender.

b. After receiving this CTS packet, the sender begins to send data packets to the receiver. The handshake between the RTS and the CTS ensures that the neighbor nodes know that the sender and the receiver are transmitting data. With that, the transmission collision can be greatly reduced.

(6) Network Allocation Vector (NAV)

In S-MAC protocol, each node maintains an NAV to indicate the active time of its neighbor nodes, and each packet of S-MAC protocol contains a continuous time duration indicator, which indicates the duration of current communication. When a neighbor node receives the packet sent by the sender or the receiver to other nodes, the neighbor node will know how long it should sleep, that is, to update NAV value according to the time duration in the packet. When the NAV value is not zero, the node should enter a sleeping state to avoid overhearing. As soon as the NAV value turns zero, the node will wake up at once and get ready for communication.

1.2 Network Performance of S-MAC Protocol

(1) Energy

The factors of energy-consuming in WSN include idle listening, competition collision, overhearing, and overhead control. The S-MAC protocol has formulated corresponding mechanisms based on these energy-consuming factors. The regular listen and sleep mechanism is used to make nodes enter a sleeping state periodically in order to reduce energy consumption for listening idle nodes. The overhearing avoidance mechanism is used to make the nodes in communication enter a sleeping state to reduce energy consumption for overhearing. The message passing mechanism is adopted to reduce RTS/CTS control packets so as to decrease the energy for overhead control.

(2) Latency

In S-MAC protocol, the introduction of periodic sleep mechanism brings extra latency. However, adaptive listen mechanism is able to improve its latency feature. With the adaptive listen mechanism, a node does not enter a sleeping state immediately after the communication ends; instead, it will keep on listening for a period of time. And if the node receives the RTS or CTS control packet sent to it within this period, it will immediately get ready for communication, without waiting for the next listen time.

In the following, there are analyses and comparisons of network latency among three types of S-MAC protocols: S-MAC protocol with neither sleep nor adaptive listen mechanisms, S-MAC protocol with sleep mechanism but without adaptive listen mechanism, and S-MAC protocol with both sleep and adaptive listen mechanisms.

The following definitions are made first:

$T_{nothing}$ refers to average latency in the network based on the S-MAC protocol with neither sleep nor adaptive listen mechanisms;

T_{sleep} refers to average latency in the network based on the S-MAC protocol with sleep mechanism but without adaptive listen mechanism;

T_{all} refers to average latency in the network based on the S-MAC protocol with both sleep and adaptive listen mechanisms.

Conclusions are obtained from the analysis of Reference [2]:

$$T_{nothing}=N(t_{cs}+t_{tx}) \quad (1)$$

$$T_{sleep}=NT_f-T_f/2+t_{cs}+t_{tx} \quad (2)$$

$$T_{all}=NT_f/2+2t_{cs}+2t_{tx}-T_f/2 \quad (3)$$

Among which, t_{cs} is the size of Competition Window (CW), t_{tx} is transmission latency, T_f is one frame time, and N is the sum of

D:\EMAG\2007-09-15/VOL5\RA2.FIT——4PPS/P2

transmission hops of a packet.In a condition that the duty cycle is not large, T_f is much greater than t_{cs} and t_{tx}. According to Formulas (1), (2) and (3), T_{sleep} and T_{all}, with the increasing of hops, augment more than $T_{nothing}$, and the increase of T_{sleep} is approximately half of that of T_{all}. It indicates that, in the S-MAC protocol with the sleep mechanism, the latency increasing rate in the network with adaptive listen mechanism is reduced to half of that without the adaptive listen mechanism. Anyhow, both of them have more latency than the S-MAC protocol without the sleep mechanism, so neither is ideal in latency performance.

▼Table 1. Comparison of protocol performances

Name of Protocols	Energy Consumption	Latency	Throughput
T-MAC	Decreased	Increased	Decreased
P-MAC	Decreased (Lower Load)	—	Increased (Higher Load)
TEEM	Decreased	—	—
U-MAC	Decreased	Reduced	—
AC-MAC	—	Reduced	Increased
PCSMAC	Decreased	—	—
DCMA/AP	Decreased	—	—

Note: "—"indicates the performance is equivalent to that of S-MAC.

2 Improvement of S-MAC Protocol

There are mainly two methods to improve S-MAC protocol: dynamic adjustment, and sending control and data packets under different transport conditions.

2.1 The Enhanced S-MAC Protocol Based on Dynamic Adjustment

In S-MAC protocol, dynamic adjustment is fixed, that is, the time durations for periodic listen and sleep are not flexible. The following protocols are aiming at this disadvantage to dynamically adjust and save energy.

Timeout MAC (T-MAC) [3] protocol conducts dynamic adjustment based on five events and Time Active (TA). The five events are:

- Frame-length timeouts.
- Node has received data.
- Data Transmission collision occurs.
- Node data acknowledges that sending is successful.
- A neighbor node completes the data exchange.

If Radio Frequency (RF) module doesn't detect any of those five events within TA via listening, it will consider that the signal channel is idle, and the node will then shutdown the RF module and enter a sleeping state.

In Pattern MAC (P-MAC) protocol[4], a node and its neighbor nodes indicate their sleep/wake plan for future several slots by a bit string, which is called "sample" in this protocol. The node is able to adaptively adjust relying on its own "sample" as well as that of neighbor nodes and finally form its own scheduling table.

In Traffic Aware Energy Efficient MAC (TEEM) protocol[5], there are two categories of synchronization packet (SYNC): $SYNC_{data}$, which indicates there are data packets queuing and ready for sending, and $SYNC_{nodata}$, which indicates there's no data packet for sending. When a node receives $SYNC_{nodata}$, it will sleep at the time when it is originally supposed to send data packets. When a node receives $SYNC_{data}$, it will reply CTS data packet directly and starts communicating.

A variable U is defined in Parameter U MAC (U-MAC) protocol[6]. An equation is shown below:

$$U = \frac{T_{rx} + T_{tx}}{T_{rx} + T_{tx} + T_{idle}} \quad (1)$$

Among which T_{rx} stands for the total sending time, and T_{idle} stands for the total idle time.

The dynamic adjustment is done in accordance with parameter U from the above equation. If U is greater than the upper threshold of traffic (U_{high}), it implies the current communication traffic is beyond what the current scheduling mechanism can bear. This case asks to increase the dynamic adjustment value. If U is less than the lower threshold of traffic (U_{low}), it indicates the communication traffic is very small, and that the dynamic adjustment value should be smaller to prolong the sleeping time and save energy.

Adaptive MAC (AC-MAC) protocol[7] uses the quantity of data packets queuing in MAC Layer to represent the volume of traffic, recorded as N_i. It divides the original large period into several $\hat{T}_{frame}$, the smaller periods, via the utility function, $R_i = f(N_i)$, and the formula, $\hat{T}_{frame} = (T_{RTS/CTS} + T_{sleep})/R_i$. Here, $\hat{T}_{frame}$ stands for the frame time, R_i is the mapping of N_i using the algorithm of the above utility function. This gives more opportunities in sending data than the original dynamic adjustment.

2.2 Sending Control and Data Packets under Different Transport Conditions

In S-MAC protocol, the conditions, such as sending power and channel conditions, for a node to send control packets RTS/CTS/ACK and data packets DATA are consistent. However, in practice, the length of control packets is much shorter than that of data packets, and the information in control packets is not so important. Power Control MAC (PCSMAC) protocol and Double Channel MAC (DCMA/AP) protocol can send control and data packets under different transport conditions, and, in this way, save energy.

In PCSMAC protocol, the powers for a node to send control packet RTS/CTS/ACK and data packet DATA are different.

The node scheduling table adds the minimum transmission power required for communication between one node and its neighbor nodes. Therefore, the node will select the maximum power to send RTS/CTS/ACK, and select the proper power enough to send DATA to its destination.

In DCMA/AP protocol, the channels for a node to send control packets RTS/CTS/ACK and data packets DATA are different, that is to say, the protocol adopts double channels for transmission. The channel used for transferring RTS/CTS/ACK control packets is the control channel, and the other one used for transferring DATA packets is data channel. Table 1 summarizes the comparison of performances between the above revised protocols and the original S-MAC protocol.

From the analysis above, the research on the competition-based MAC protocols should be focused on the following aspects in the future:

D:\EMAG\2007-09-15/VOL5\RA2.FIT——4PPS/P3

(1) Granted that the energy efficiency is guaranteed, various performance indices should be compromised. If energy efficiency is fulfilled, latency or throughput performance must be sacrificed in order to save energy-under the condition that latency and throughput are ensured.

(2) The protocols guarantee Quality of Service (QoS) better. With the development of various applications, it becomes more and more important to provide different Quality of Service to different services. Further research is necessary for the MAC protocol of the WSN that supports QoS.

(3) Inter-layer protocols are relatively complicated for implementation. However, the inter-layer design of protocols enables the network to perform at its best in every aspect.

3 Conclusions

Sensor network is one of the latest hot topics in the communications industry. It has a promising application prospect. Through the researches all over recent years, people know more about the design requirements for Sensor Network MAC(S-MAC) protocol[8-9].

Naturally, it's not realistic to design a MAC protocol to satisfy all requirements of WSN. So, appropriate MAC protocols should be designed according to different application requirements, and using different methods.

References

[1] Yu Haibin, Zeng Peng, Liang Wei. Intelligent Wireless Sensor Network System [M]. Beijing: Science Press, 2006:68-102.

[2] Ye Wei, Heidemann J, Estrin D. Medium Access Control with Coordinated Adaptive Sleeping for Wireless Sensor Networks [J]. IEEE/ACM Transactions on Networking, 2004,12(3):493-506.

[3] Zheng Tao, Radhakrishnan S, Sarangan V. PMAC: an Adaptive Energy-efficient MAC Protocol for Wireless Sensor Networks [C]//Proceedings of 19th IEEE International Symposium on Parallel and Distributed, Apr 4-8, 2005, Denver, CO, USA. Piscataway, NJ, USA: IEEE Computer Society, 2005: 8.

[4] Suh Changsu, Ko Youngbae. A Traffic Aware, Energy Efficient MAC Protocol for Wireless Sensor Networks [C]//Proceedings of International Symposium on Circuits and Systems: Vol3, May 23-26, 2005, Kobe, Japan. New York, NY, USA: IEEE, 2005: 2975-2978.

[5] Yang Shihhsien, Tseng Hungwei, Wu E H K, et al. Utilization Based Duty Cycle Tuning MAC Protocol for Wireless Sensor Networks [C]//Proceedings of IEEE Global Telecommunications Conference: Vol6, Nov 28-Dec 2, 2005, St Louis, MO, USA. Piscataway, NJ, USA: IEEE, 2005:5.

[6] Ai Jin, Kong Jingfei, Turgut D. An Adaptive Coordinated Medium Access Control for Wireless Sensor Networks [C]//Proceedings of Ninth International Symposium on Computers and Communications: Vol1,?Jun 28-Jul 1, 2004, Alexandria, Eqypt. Piscataway, NJ, USA: IEEE Computer Society, 2004: 214-219.

[7] Nar P C, Cayirci E. PCSMAC: a Power Controlled Sensor-MAC Protocol for Wireless Sensor Networks [C]// Proceeedings of the Second European Workshop on Wireless Sensor Networks, Jan 31-Feb 2, 2005, Istanbul,Turkey. Piscataway, NJ, USA: IEEE Computer Society, 2005: 81-92.

[8] Ji Yang, Zhang Ping. Architecture of Wireless Sendor Networks [J]. ZTE Communications, 2005, 11(4): 32-36.

[9] Miao Fuyou, Xiong Yan, Wei Guo. A Simple On-demand Routing Protocol for Wireless Sensor Networks [J]. ZTE Communications, 2005,11(4): 42-46.

Biography

Jiang Xue is studying at Nanjing University of Posts and Telecommunications for her Master's degree. Her major research direction is Wireless Sensor Networks (WSN).

Roundup

ZTE Rolls Out the First Full-Scale BBU+RRU Solution in the Industry

August 7, 2007, Shenzhen, China – ZTE Corporation ("ZTE"), a leading global provider of telecommunications equipment and network solutions, announced today the official launch of its GSM BBU+RRU Solution, which leverages on fiber-optic remote technology to enable distributed base station deployment, with Base Band Unit (BBU) that supports up to a record high capacity of 48TRX. To-date, ZTE has launched distributed base station solutions to support five different wireless standards, including WCDMA, TD-SCDMA, GSM, CDMA and WiMAX, and is the first to offer a full-scale BBU+RRU solution in the industry.

The BBU+RRU distributed base station is easy to deploy and available at a very competitive price. The solution was first introduced in 2005 to address the increasing environmental awareness, rapid deterioration of resources in densely populated areas, and the soaring cost of traditional macro base station operations. With the BBU+RRU solutions, ZTE further demonstrates its strength in being the first in the market to offer the technology in the WCDMA arena, besides being the pioneer vendor of BBU+RRU solution in TD and GSM fields.

In the wireless communication industry, ZTE puts emphasis on innovation to differentiate itself from its competitors. The unique features that ZTE offers are designed to meet the needs of diversified customers. The company is the first in the industry to achieve a WCDMA/TD-SCDMA/CDMA2000/GSM compatible ALL-IP integrated hardware platform, and has developed a WCDMA/TD-SCDMA/GSM multi-system BBU+RRU solution to address the Femto base units in urban cell sites.

Leveraging on the innovation from the all-IP unified hardware platform and BBU+RRU solution, ZTE has constructed WCDMA network in 20 countries worldwide, including Libya, Estonia and Nepal. In 2006, ZTE was ranked number one in the world in terms of total capacity of CDMA shipment. In the recent tender for the "augmentation of TD-SCDMA trial network" hosted by China Mobile, ZTE has won 50% of the market share. (ZTE)

D:\EMAG\2007-09-15/VOL5\RA2.FIT——4PPS/P4